CHCNAV C30 Oblique Camera System

User Manual

Version 1.0



Mobile Mapping | Dec 2022

Make your work more efficient

Table of Content

Table of Content **2**
1 Reading Tips **3**
1.1 Symbol Description 3
1.2 Recommendations 3
1.3 Service & Support 3
1.4 Disclaimer 4
2 Using Requirements **5**
2.1 Tips For Cleaning 5
2.2 Tips During Using 5
2.3 Tips After Using 5
3 Product Description **6**
3.1 Introduction 6
3.2 Equipment Size 6
3.3 Electrical characteristics 6
3.4 Equipment Parameters 7
4 Product Installation **8**
4.1 Available Aircraft 8
4.2 Installation to Aircraft 8
4.3 Installation Tips 8
5 Data Capture Introduction **9**
5.1 Mission Planning 9
5.2 RTK Setting 9
5.2.1 Network RTK Setting 9
5.2.2 Base RTK Setting 9
5.3 Camera Setting 10
5.4 LED Description 10
6 Data Processing **11**
6.1 Data Copy 11
6.2 POS Solving 12
7 Equipment Maintenance **16**
7.1 Firmware Upgrade 16
7.2 Upgrade indicator sounds 16

1 Reading Tips

1.1 Symbol Description

Forbid

Warning

Important note

Operate & Using tips

1.2 Recommendations

CHCNAV provides below documents for user:

- Product configuration list
- C30 oblique photography system user manual

It is recommended for user to read above documents before first time using.

1.3 Service & Support

CHCNAV website: http://www.chcnav.com

Service Hotline: 400-620-6818

Wechat public:

1.4 Disclaimer

- The customer should use and maintain the equipment in accordance with the requirements of the manual. If the service life of equipment is affected due to improper use or maintenance, even broken, CHCNAV will not bear the relevant responsibility. All repairs and maintenance services resulting from this will be charged at standard prices.
- During the transportation, if the equipment is damaged due to improper logistics operation, CHCNAV will not bear the relevant responsibility.
- During equipment using time, if customer disassembles and assembles the equipment without CHCNAV's suggestions & permission, and resulting in damage, CHCNAV will not bear the relevant responsibility.
- Customer should use default batteries and accessories. If use non-dedicated batteries, the charger may cause unexpected situations like explosions, fires etc. The use of non-original accessories is not eligible for warranty; if occur accident, the manufacturer will not bear the corresponding responsibility.

2 Using Requirements

2.1 Tips For Cleaning

- When cleaning the camera lens, always wipe with a soft, dry-cleaning cloth and never use alkaline cleaners.
- Please note that do not touch the surface of the camera lens directly with hands or scratch it with hard objects, otherwise it will blur images and affect the image quality.

2.2 Tips During Using

- Please do not interrupt the power supply to the camera frequently. Please allow more than 20 seconds intervals to supply power to the device after each time power cut, otherwise it will affect the life of the camera components.
- When using the camera, do not plug or unplug the unified memory module (memory card) during photography and video recording.
- Before plugging the memory card into the camera slot, please ensure that the slot is clean and free of foreign objects, and the memory card is inserted firmly afterwards.
- Please ensure that the surface of the camera interface is dry and free of water before installing the camera.
- Make sure that the camera is securely mounted on the aircraft before starting camera.

2.3 Tips After Using

- This equipment is precise which requires to be placed in a safety box during transportation.
- Do not place the equipment in direct sunlight, in poorly ventilated locations, or near heat sources such as heaters or heaters.
- Please store the equipment in a dry, ventilated place at room temperature to avoid fogging of the lens due to excessive humidity. If the lens fogs up, the vapor will normally dissipate after a period of time when the equipment is switched on. The recommended storage environment is less than 40% relative humidity and a temperature of 20±5 ^{0}C.

3 Product Description

3.1 Introduction

C30 oblique camera system is a high performance, lightweight and professional payload which developed by CHCNAV. It is equipped with five 26MP half-frame image sensors, integrated between-lens shutter, and supports CHCNAV Alphaport or DJI Skyport, which can install on different drone platforms. C30 has small, light and easy to carry design, and supports single person operations. One button control of the device acquisition, easy to operate and quick to get started. Together with CoPre software, it provides users with an integrated, highly accurate and efficient aerial survey solution.

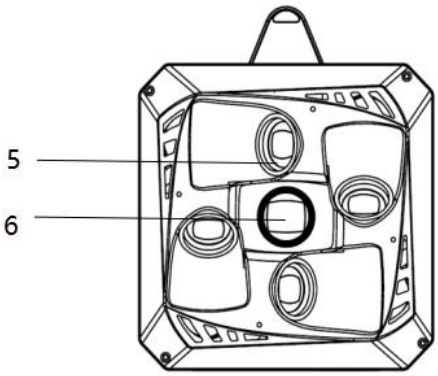

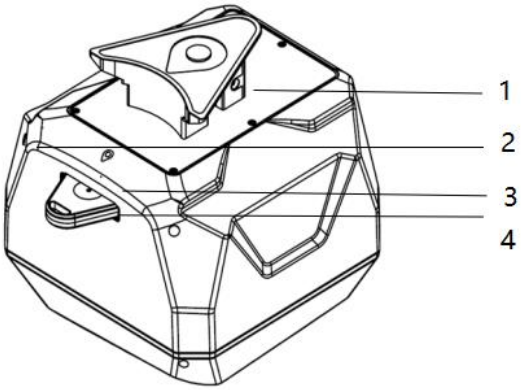

1. A-mount
2. Indicator light
3. Memory card slot
4. Memory module
5. Oblique lens
6. Orthographic lens

3.2 Equipment Size

- Size: 110*108*85mm
- Weight: ≤605g (without memory card)

3.3 Electrical characteristics

- System power consumption: rated 25W
- Working temperature: -20℃~+50℃
- Storage temperature: -20℃~+60℃

3.4 Equipment Parameters

Product name	C30
Sensor size	23.5*15.6mm
Photo size	3:2（6252*4168）
Camera sensor number	5
Focal length	Orthographic lens: 25mm
	Oblique lens: 35mm
Valid pixels	130MP (26MP*5)
Store methods	Removable memory card
Data copy speed	300Mb/s
Minimum photo interval	0.6s
Aperture size	F5.6
ISO range	100~3200

4 Product Installation

4.1 Available Aircraft

- MATRICETM 300 RTK
- P330 Pro

4.2 Installation to Aircraft

- Plug the memory card into the camera's memory card slot, and the card indicator side need target to Alphaport position. Plug the card into a position parallel to the camera's indicator to indicate that the memory module is plugged in.
- Align the camera Alphaport with the recessed A-port of the aircraft, insert the port and turn the knob on the right side of the aircraft port until the port is fully locked (when mounting the MATRICETM 300 RTK, insert the A-port into the A-DJI DL adaptor and attach the A-DJI DL adaptor to the MATRICETM 300 RTK aircraft via the DJI DL adaptor).
- Power on and start aircraft, when the camera buzzer sounds and the camera indicator starts flashing after a short period of constant light, the equipment is properly powered on.
- Wait until the camera light starts to change from flashing to constant light to indicate that the equipment is ready for flight operations.

4.3 Installation Tips

- If camera cannot be installed properly, please check whether knob of Alphaport was fully open. If not, please install camera after fully open knob.
- Remove camera from aircraft when transportation and storage, to avoid reduced life of Alphaport due to bumps.
- Recommend remove camera after powering off aircraft.

5 Data Capture Introduction

5.1 Mission Planning

- Open ground station control software (different UAV use different mission design software), go to mission planning page and choose to create a route or import a KML.
- Choose C30 camera type in the route parameter settings, if this camera option is not available, user need to manually define a set of parameters: photo resolution (6252px wide, 4168px high), sensor size (23.5mm wide, 15.6mm high), focal length (25mm) minimum timed photo interval (0.8s).
- Set the photo mode (recommended distance trigger), heading overlap rate, side overlap rate, edge distance (recommended 20m) and route angle to complete the parameter setting.

5.2 RTK Setting

5.2.1 Network RTK Setting

- Make sure network connected base station before using Network RTK.
- Use function of RTK location in Network RTK setting interface. Select RTK service as Network RTK.

5.2.2 Base RTK Setting

- Select a surrounding open and flat terrain for the base station set-up. Press and hold the power on button to turn on the RTK, set the RTK to auto base mode and connect to the base station software via Bluetooth or WIFI.
- Turn on the receiver static via the web page and set the differential data to be sent by Bluetooth or WIFI.
- Please measure the slant height from the base station to the ground after the acquisition is completed before turning off the receiver.
- If you are using RTK, please choose a location that is as open as possible and has a clear view of the survey area in order to ensure communication quality, as communication interruptions can cause disruptions to the differential data and thus affect model accuracy.
- Before the aircraft takes off, ensure that the aircraft is currently in the fixed solution state and that the differential delay is not greater than 60 ms to ensure that the aircraft is in the fixed solution state throughout the flight.

5.3 Camera Setting

- To ensure consistent model quality, the camera parameters support both sunny and cloudy modes, so you can select the corresponding mode for your work depending on the weather conditions on site.
- You can manually set camera parameters according to realistic environment. Recommended parameters are shown below:

ISO	Shutter speed	Applied scenarios
1600	1/1000	Cloudy days and sunny days with little light
800	1/1000	Sunny day in stronger sunshine

5.4 LED Description

Indicator Light	Description
Solid green	Ready to take off
Quick blink green	Camera is preparing
Slow blink green	Capturing
Solid red	Abnormal

6 Data Processing

6.1 Data Copy

- Insert the memory card into the U-LINK copy tool and connect it to PC. Open the CoPre software and click CopyDataTool (CoPre version 2.4 is used as an example).
- The copy screen will highlight a reminder of the day's projects. User can select the project to be copied by clicking on the left mouse button (Ctrl+left mouse button to select multiple projects in total). All the photos of the selected project are displayed in the right-hand column. At the bottom left of the copy screen you can confirm the acquisition time, the total number of photos captured by the camera and the number of missed shots.

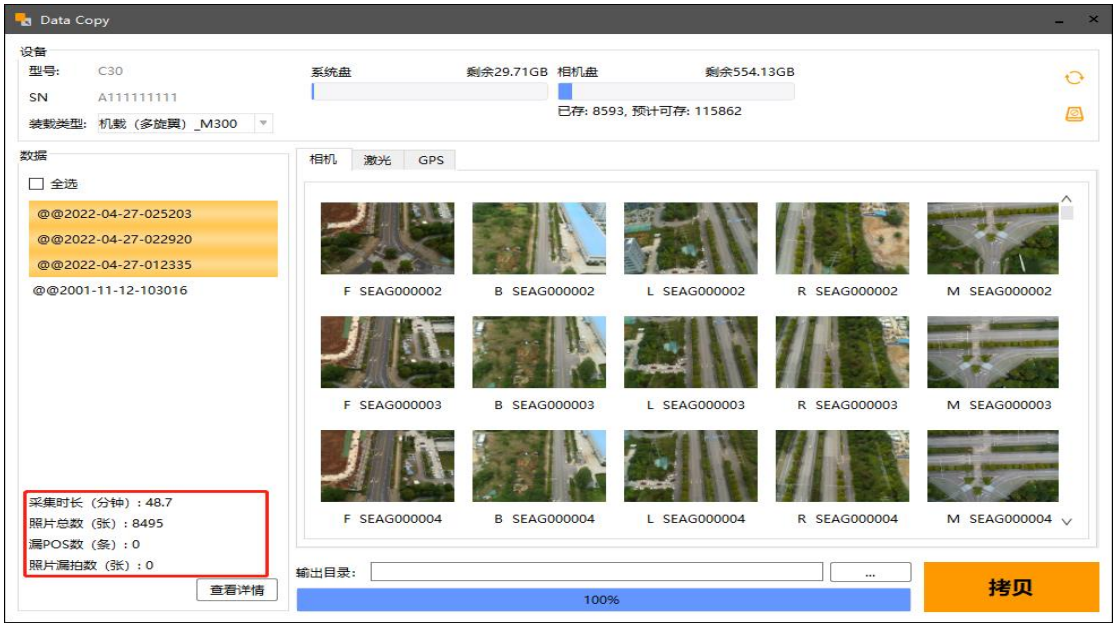

- Click on the "..." button to copy the output directory. Once you have determined the output directory, click on the Copy button to start copying.
- Do not cut, delete or format the data in the memory module directly from the computer's File Explorer, as this may broke data.
- Copy directory names are only supported in English. Inclusion of other languages will affect POS solving.
- Please do not disconnect the memory module or U-LINK copier during the copying process as this may cause irreparable damage to the data.

6.2 POS Solving

- Once the data has been copied, return to the CoPre screen, and click the Create button to pop up the Create Task window.

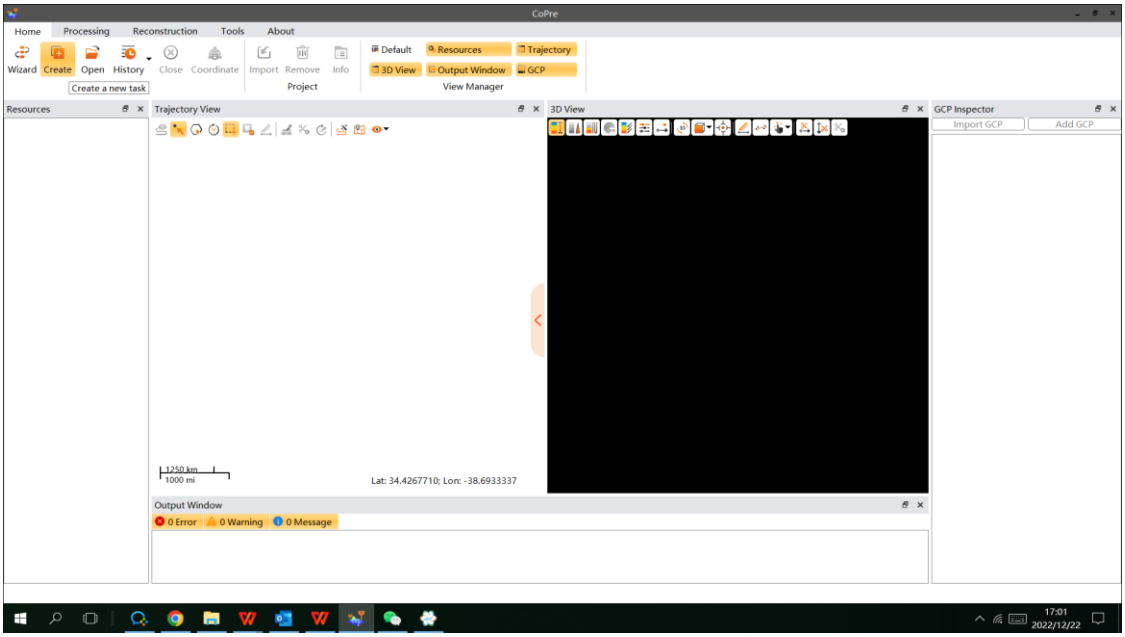

- Enter the task name (English letters), import project data and define the task path, then click the Create button.

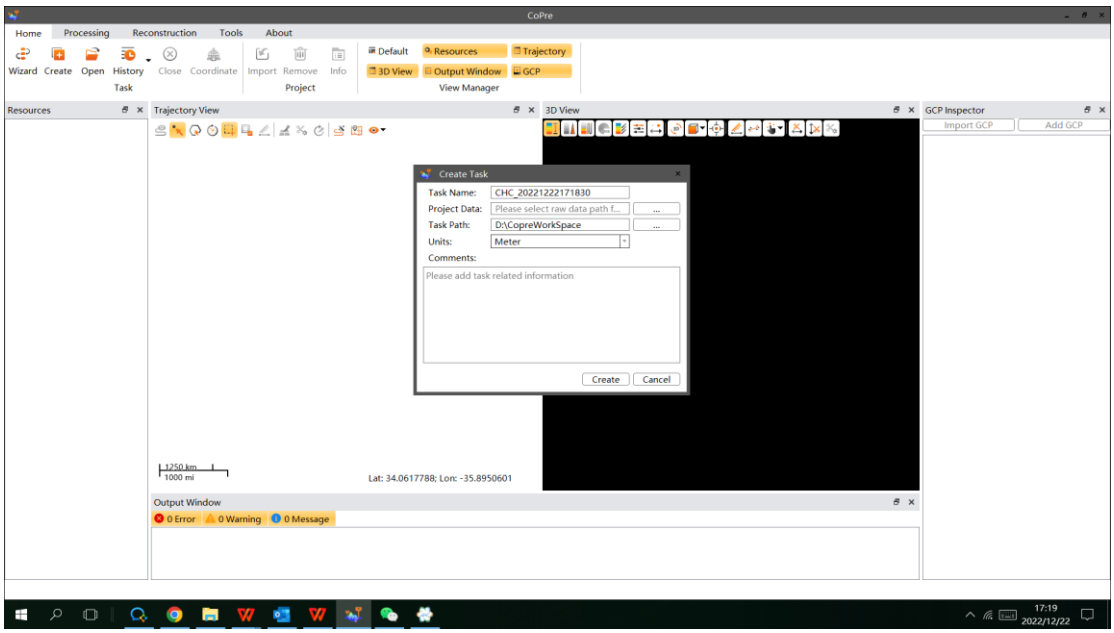

- Right click on the project and select open directory. When the project directory pops up, put the base station data into the GPS/base directory. Go back to the data processing interface and right click on the project, select POS solution, after entering the solution

interface, enter the base station coordinates, select the base station height measurement method, and finally click OK. (If you are using M300 for data collection, you can skip this step)

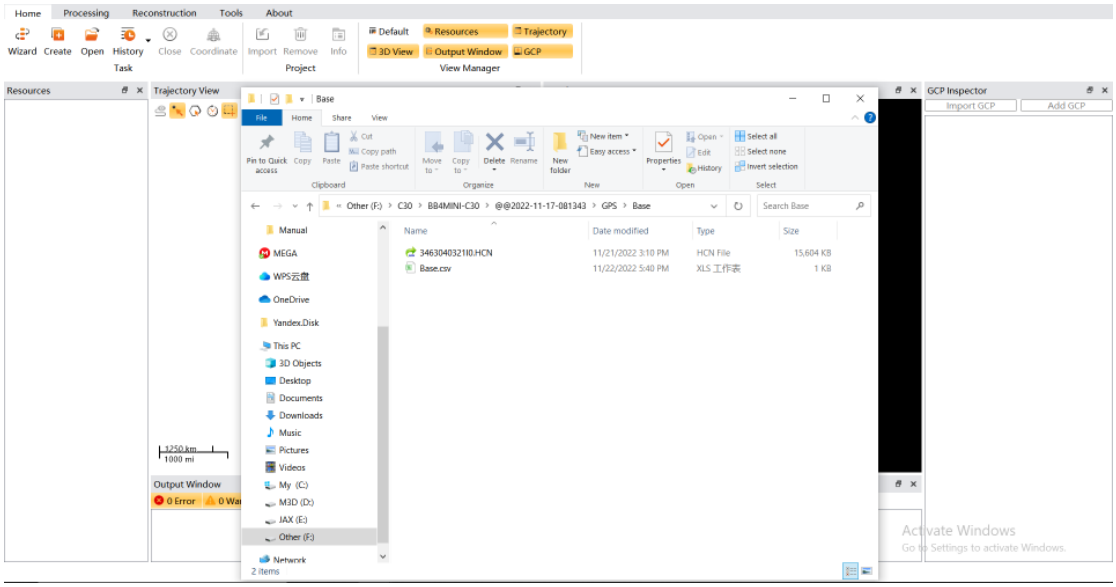

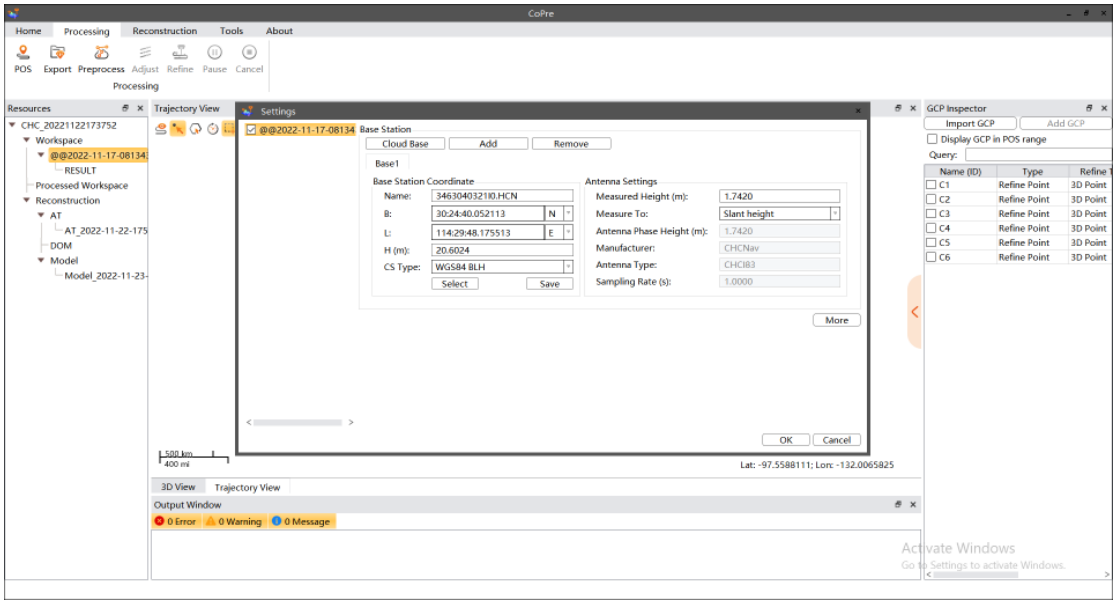

- Right click project name and choose display trajectory to load flight route on trajectory view.

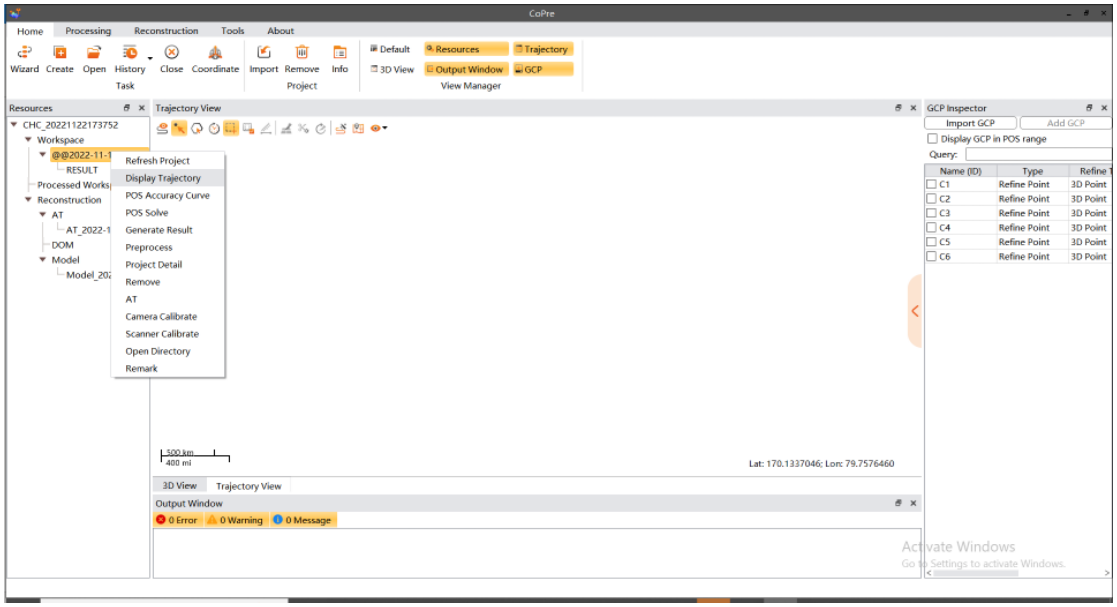

- Use manual or fence selection mode to select processed trajectory. Selected trajectory will show red color, and software will only process this part.

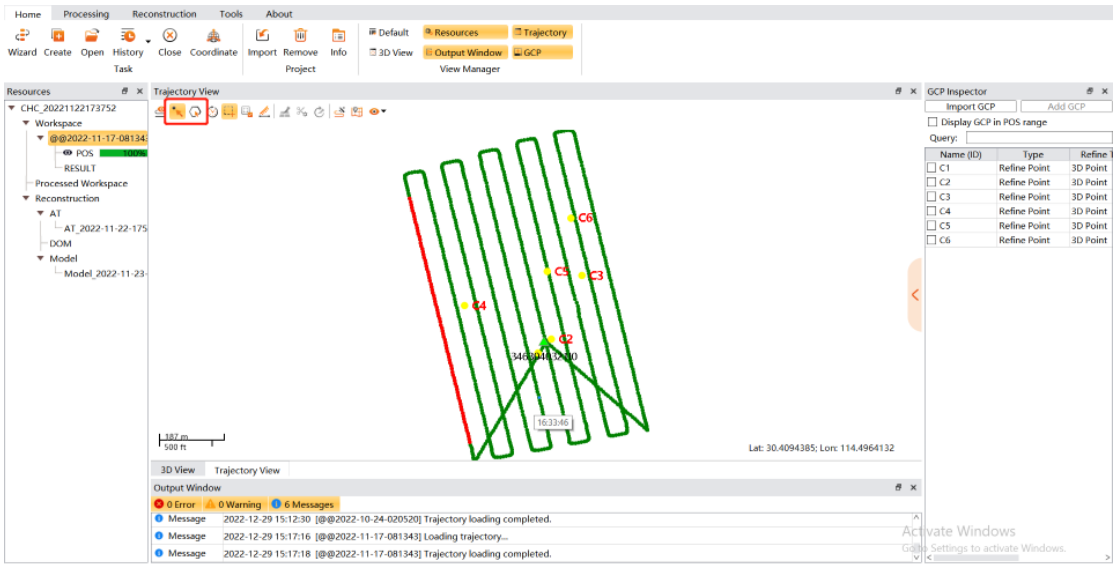

- Select project then click Export. Check “Organize Pictures” then click Ok to process picture POS.

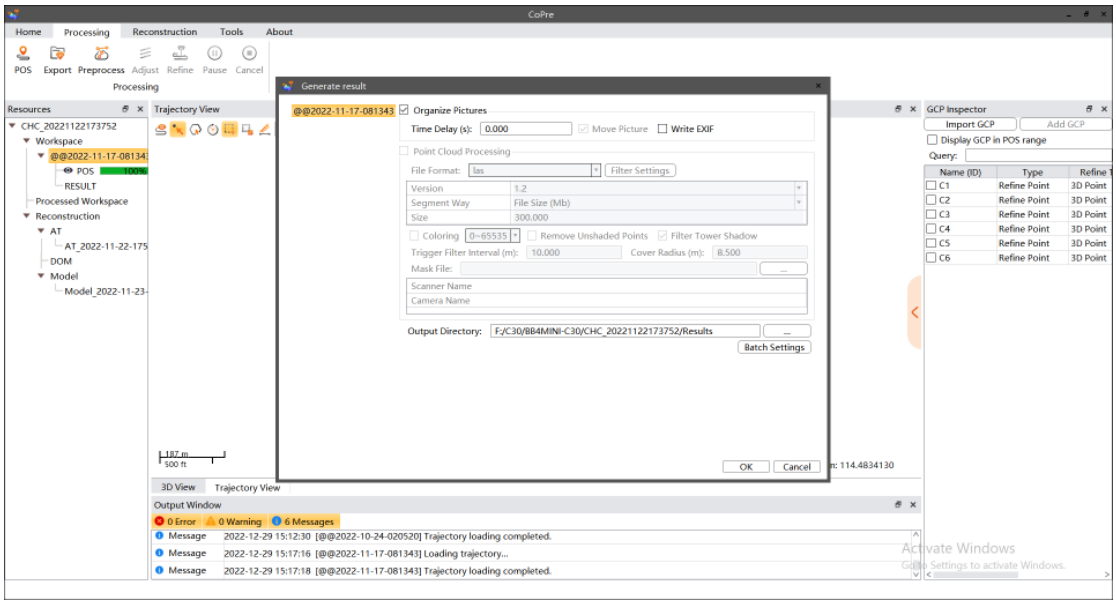

- When process finish, there is a Result node appear. Right click then choose “Open Directory” to open result folder. User can find picture coordinates information.

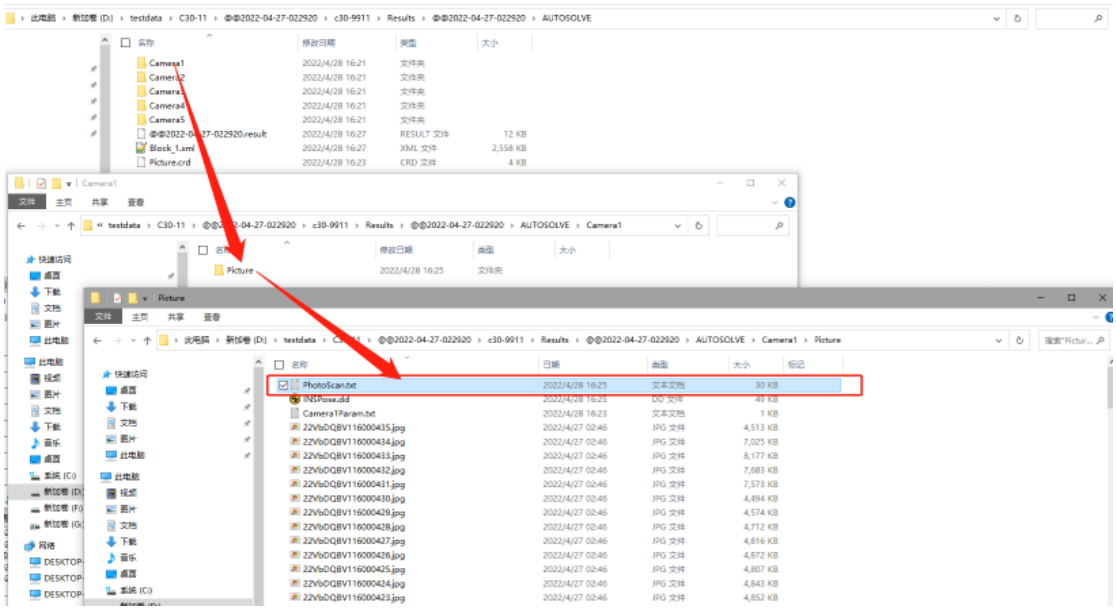

7 Equipment Maintenance

7.1 Firmware Upgrade

This equipment only supports memory module upgrade, please make sure the C30 load is in the off state, the memory module (card) has enough storage space and the battery of the aircraft is fully charged before upgrading.

- Visit the official website of CHCNAV or consult CHCNAV after-sales service to obtain the latest version of the firmware upgrade package.
- Connect the memory card to the computer via U-LINK copier.
- Copy the firmware upgrade package files to the root directory of the CAM_M+L+R+B+H disk of the memory module respectively.
- Insert the memory module into the card slot of the C30 load and install the C30 correctly on the aircraft.
- Turn on the power of the flight unit, the gimbal camera will start a self-test and begin to automatically upgrade the firmware with a status beep.
- After the upgrade is complete, please reboot the device.

7.2 Upgrade indicator sounds

Please ensure that the storage module only holds single version upgrade files, otherwise an upgrade exception will occur. Do not power off the aircraft or remove the C30 load during the firmware upgrade as this may cause damage to the camera.

Indicator lights and sounds	Description
Di——， Green light long pass， ...	Detecting upgrade file
Di——， Green light flash， ...	Firmware upgrading, please do not interrupt
Di， Di， Di， Green light flash， ...	Firmware upgrading success
Di——， Red light flash， ...	Firmware upgrade fails, please try upgrading again. If it fails after several attempts, please contact our service staff for assistance.

CHC Navigation

Building C, NO. 577 Songying Road,
Qingpu District, 201703 Shanghai, China

Tel: +86 21 542 60 273 | Fax: +86 21 649 50 963
Email: sales@chcnav.com | support@chcnav.com
Skype: chc_support
Website: www.chcnav.com